YILDIZ – ÜÇGEN KALKIŞ MOTORLAR İÇİN / *FOR STAR-DELTA STARTING MOTORS*

ANMA GÜCÜ *RATED POWER* PN		GERİLİM *VOLTAGE*	ANMA AKIMI *RATED CURRENT* IN	*Maks. Akım Taşıma Kapasitesi (Amper)* / *Max. Current Conduction Capacity (Ampere)*												
				31	41	55	71	98	131	175	216	261	332	401	466	529
kW	HP	V		*Kablo kesiti 3 X .....mm² - Cable Cross-Section 3 X .....mm²*												
				1,5	2,5	4	6	10	16	25	35	50	70	95	120	150
				Maks. Kablo Uzunluğu / Max. Cable Lenght												
4	5,5	380 V	10,3	100	170	270	400									
5,5	7,5	380 V	13,6	70	120	200	300	500								
7,5	10	380 V	17,3	57	90	150	220	380								
9,2	13	380 V	21,0	46	70	120	180	310	490							
11	15	380 V	25,0	39	60	100	150	260	400							
13	18	380 V	29,0		55	90	130	230	355							
15	20	380 V	33,0		50	80	110	200	310	490						
19	25	380 V	42,0			60	90	160	250	400	560					
22	30	380 V	49,8			50	70	130	210	340	470					
26	35	380 V	56,0				68	110	180	290	410					
30	40	380 V	63,0				60	100	160	250	360	500				
37	50	380 V	79,7					80	130	200	290	410				
45	60	380 V	90,0					70	110	170	240	350	480			
52	70	380 V	103,0						95	150	210	305	420			
55	75	380 V	110,0						80	130	180	260	360	500		
59	80	380 V	118,0							120	170	245	340	475		
66	90	380 V	134,0							110	160	230	320	450	520	
75	100	380 V	148,0							100	150	200	290	380	440	540
81	110	380 V	160,0							85	135	185	260	340	405	495
92	125	380 V	183,0								120	170	230	300	370	450
110	150	380 V	216,1								100	140	200	250	300	370
129	175	380 V	250,6									120	165	210	260	310
147	200	380 V	285,6										150	190	230	280
166	225	380 V	318,8										130	170	200	240
185	250	380 V	355,3											160	190	230

Kablo kesit hesaplama formülleri (bakır için) / Cable cross-section calculation formulas (for copper)

$S = 3{,}1 \times L \times In \times \cos\varphi 1 / \Delta u \times U$

$S = 2{,}1 \times L \times In \times \cos\varphi 1 / \Delta u \times U$

S= kablo kesiti (mm²)
L= kablo uzunluğu (m)
In= Anma akımı (A)
cosφ1= Tam yükteki değer
Δ u= Gerilim düşümü (%)
U= Gerilim (V)

S= cable section (mm²)
L= cable length (m)
In= Rated Current (A)
cosφ1= Value under full load
Δ u= Voltage drop (%)
U= Voltage (V)
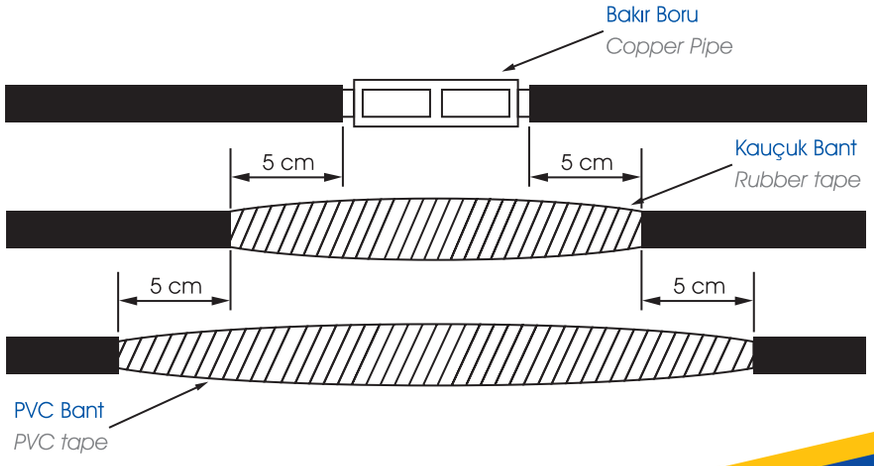
ENERJİ KABLOSU BAĞLAMA ŞEKLİ / *MODES OF CONNECTING ENERGY CABLES*